Dimensional Data

3XLM10-Series - 60 Hz

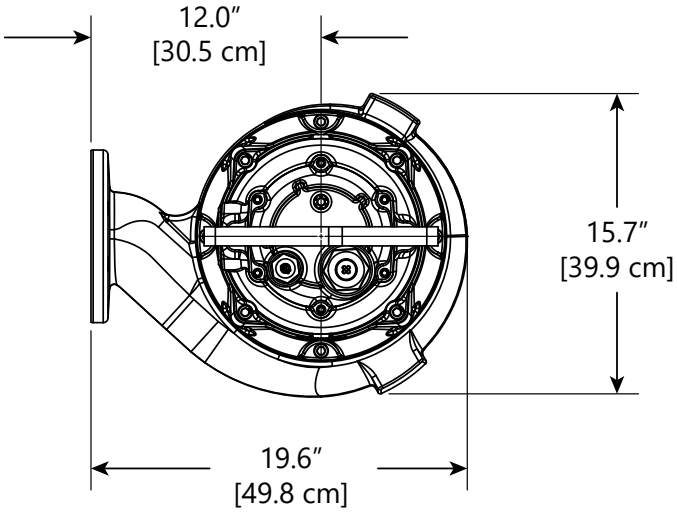

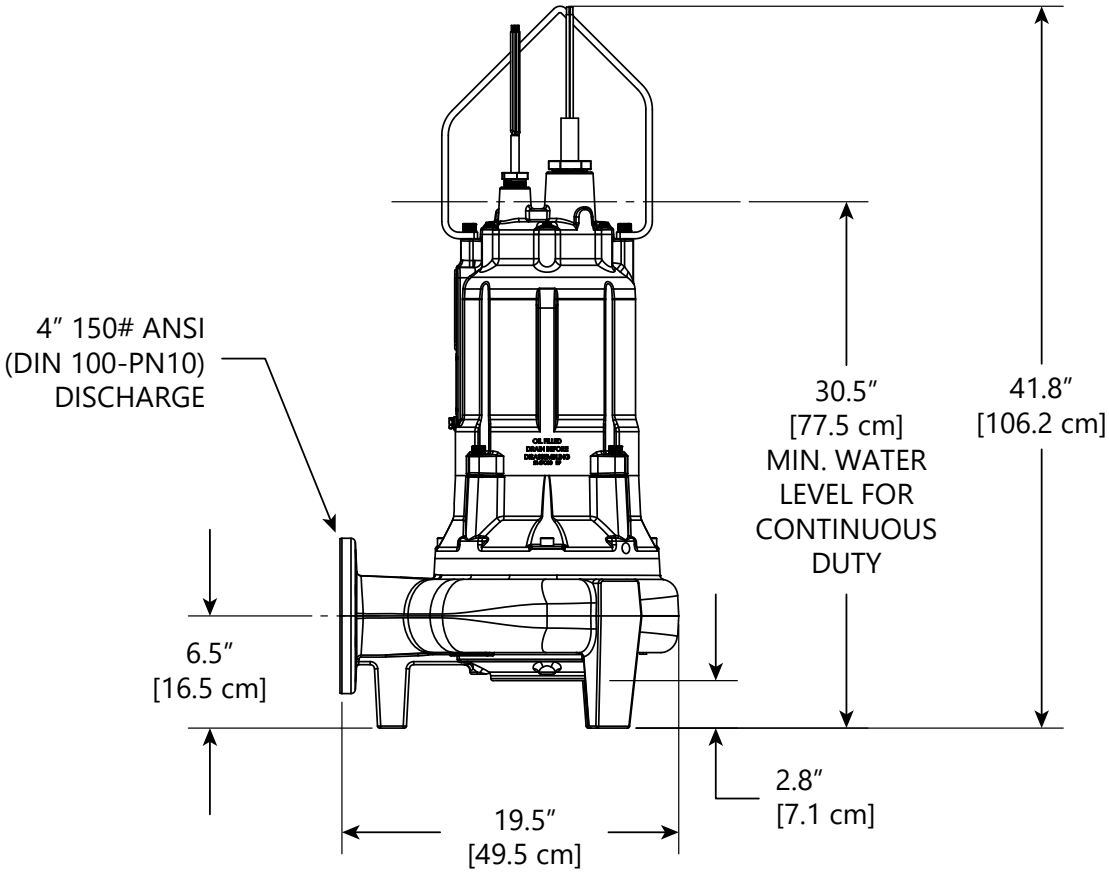

Specifications are subject to change without notice.

Copyright © Liberty Pumps, Inc. 2025
All rights reserved. LLIT3XLM10-DD R02/25

7000 Apple Tree Avenue - Bergen, NY 14416
Phone 800-543-2550 - Fax 585-494-1839 - www.LibertyPumps.com/LEP